OUT DOOR ORDER

# HALO

## OUTDOOR HEATER

- 7' 7" Height
- Standard 20 lb. Propane Tank
- 10 Hour Run Time
- 42,000 BTU's
- Fuel Efficient
- Outdoor Use Only
- 10 ft. Coverage Area

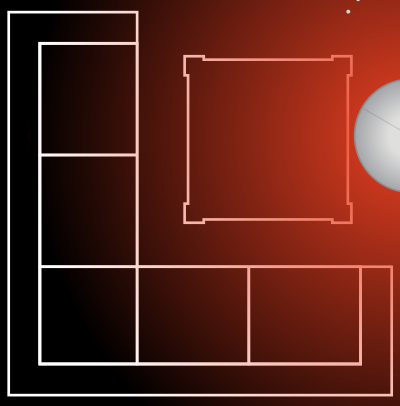

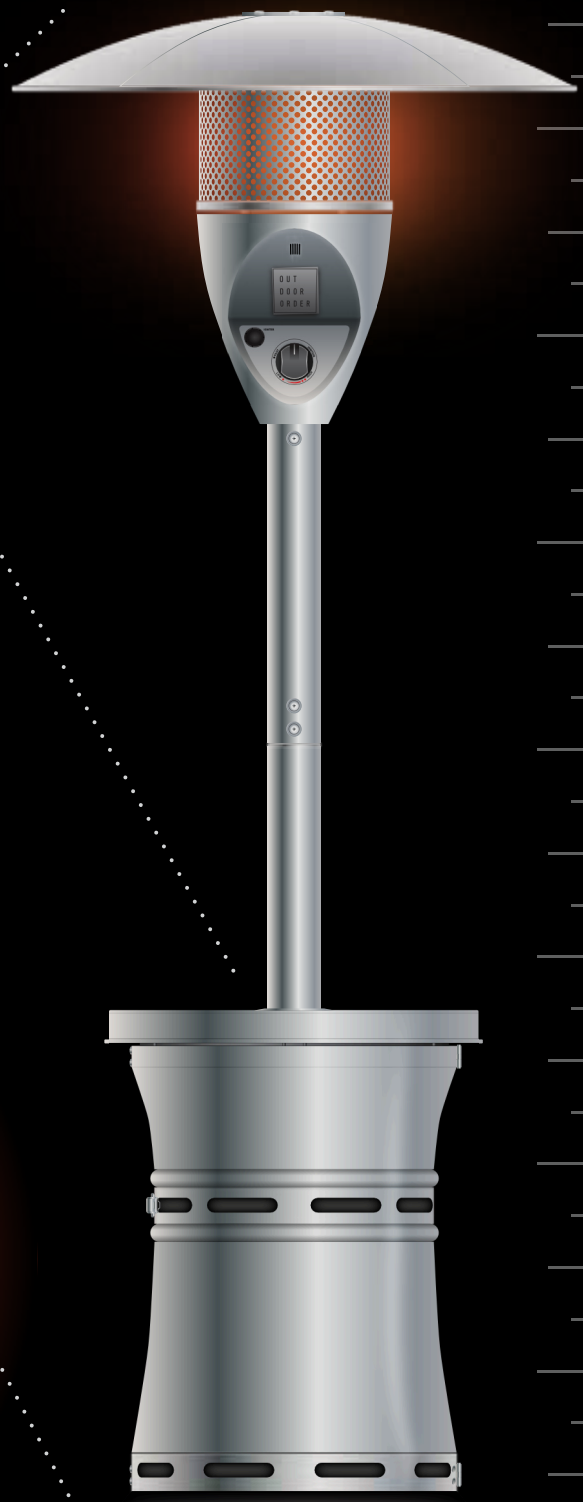

OUT DOOR ORDER™

# HALO
## PATIO HEATER

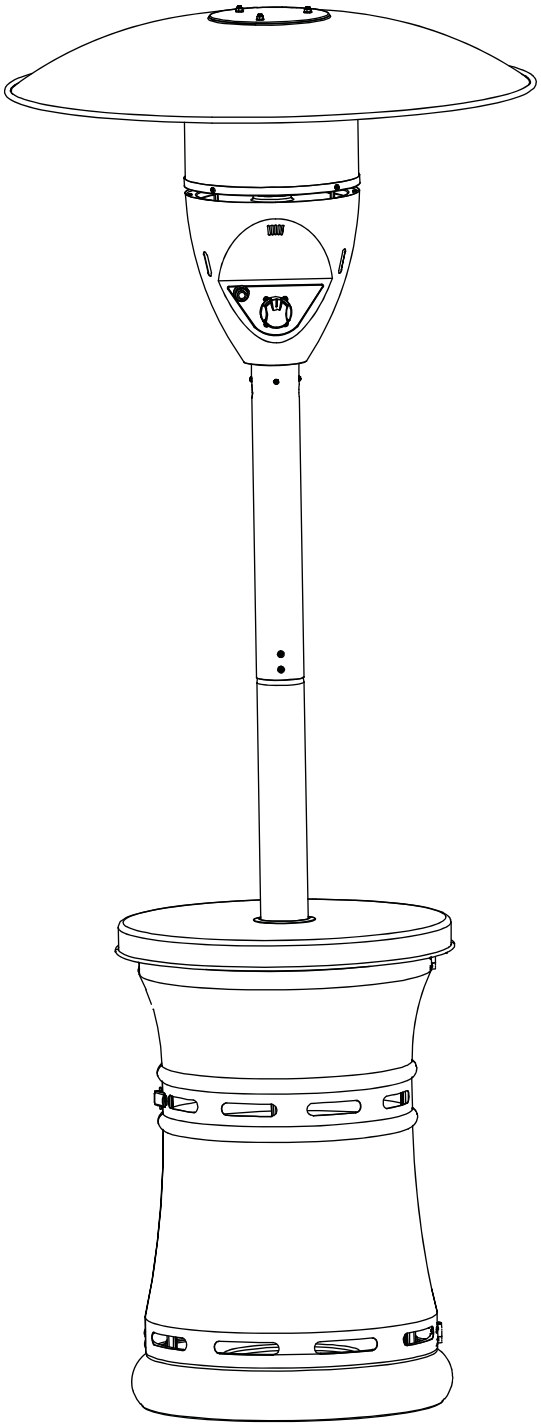

### DANGER

**If you smell gas:**
1. Shut off gas to the appliance.
2. Extinguish any open flame.
3. If odor continues, keep away from the appliance and immediately call your gas supplier or fire department.

### WARNING

Do not store or use gasoline or other flammable vapors and liquids in the vicinity of this or any other appliance.

An LP-cylinder not connected for use shall not be stored in the vicinity of this or any other appliance.

### WARNING

For Outdoor Use Only.

**CAUTION:**
Installer: Leave the instruction manual with the user for future use.
Consumer: Please keep this manual for future reference.

US

Mode# ODO-HALO-LP

Read the instructions before use.
This appliance must be installed in accordance with such regulations as are in force.

**Questions, problems, missing / replacement parts? Before returning to your retailer, call our customer service department at 1-888-806-8836, 9 a.m.-6 p.m., PST, Monday-Friday.**

**DANGER**

**CARBON MONOXIDE HAZARD**

This appliance can produce carbon monoxide which has no odor.

Using it in an enclosed space can kill you.

Never use this appliance in an enclosed space such as a camper, tent or home.

**SPECIFICATION**

| | |
|---|---|
| Certification | CSA |
| Height Overall | 2.28m / 89.8" |
| Reflector Diameter | 80cm / 31.5" |
| Rated Heat Input | 48000 BTU/HR |
| Fuel | LPG |
| Gas Supply | 20Lb (9kg) LP-Gas cylinder |
| Manifold Pressure | 11.0 ” W.C. |
| Injector Size(diameter) | 2.15mm |
| Safety Features | Flame failure device, anti-tilt switch & pilot |
| Gas Supply Pressure | Max. 250PSI, Min. 5PSI |

**WARNING:**

Improper installation, adjustment, alteration, service or maintenance can cause injury, death or property damage. Read the installation, operating and maintenance instructions thoroughly before installing or servicing this equipment.

**NOTE:PLEASE READ THE FOLLOWING SAFETY RULES**

**WARNING:**

The installation must conform with local codes or, in the absence of local codes, with the National Fuel Gas Code, ANSI Z223.1/NFPA 54, NFPA58 Natural Gas and Propane Installation Code, CSA B149.1, or Propane Storage and Handling Code, B149.2

The heater, when installed, must be electrically grounded in accordance with local codes or, in the absence of local codes, with the National Electrical Code, ANSI/NFPA 70, or the Canadian Electrical Code, CSA C22.1.

Prior to use, check for damaged parts such as hoses, regulators, burner.

All leak tests should be done with a soapy solution. NEVER USE AN OPEN FLAME TO CHECK FOR LEAKAGE.

The propane hose with regulator assembly shall be located out of pathways where people may trip over it or in areas where the hose will not be subject to accidental damage.

**Children and adults should be alerted to the hazards of high surface temperatures and should stay away to avoid burns or clothing ignition.**

**Young children should be carefully supervised when they are in the area of the heater.**

**Clothing or other flammable materials should not be hung from the heater, or placed on or near the heater.**

**Any guard or other protective device removed for servicing the heater must be replaced prior to operating the heater.**

**Installation and repair should be done by a qualified service person. The heater should be inspected before use and at least annually by a qualified service person.**

**More frequent cleaning may be required as necessary. It is imperative that control compartment, burners and circulating air passageways of the heater be kept clean.**

Keep the appliance area clear and free from combustible materials, gasoline and other flammable vapors and liquids.

Do not obstruct the flow of combustion and ventilation air.

Keep the ventilation opening(s) of the cylinder enclosure free and clear from debris.

This appliance shall be used only in a well-ventilated space and shall not be used in a building, garage or any other enclosed area.

An appliance may be installed with shelter no more inclusive than:
With walls on all sides, but with no overhead cover.
Within a partial enclosure which includes an overhead cover and no more than two side walls. These side walls may be parallel, as in a breezeway, or at right angles to each other.

**NOTE:PLEASE READ THE FOLLOWING SAFETY RULES**

**WARNING:**

Within a partial enclosure which includes an overhead cover and three side walls, as long as 30 percent or more of the horizontal periphery of the enclosure is permanently open.

This appliance requires 9kg(20lb) LP-gas supply cylinder.

The LP-gas supply cylinder to be used must be: Constructed and marked in accordance with the Specifications for LP-gas cylinders of the U.S. Department of Transportation (DOT); or the Standard for Cylinders, Spheres and Tubes for Transportation of Dangerous Goods and Commission, CAN/CSA-B339, as applicable;

Provided with a listed overfilling prevention device; and provided with a cylinder connection device compatible with the connection for the appliance.

The cylinder is to be disconnected when the appliance is not in use.

Storage of an appliance indoors is permissible only if the cylinder is disconnected and removed from the appliance.

A cylinder must be stored outdoors in a well-ventilated area out of the reach of children. A disconnected cylinder must have dust caps tightly installed and must not be stored in a building, garage or any other enclosed area.

The pressure regulator and hose assembly supplied with the appliance must be used, replacement pressure regulators and hose assemblies must be those specified by the appliance manufacturer.

The hose assembly must be replaced prior to the appliance being put into operation if there is evidence of excessive abrasion or wear, or if the hose is damaged.

Do not store a spare LP-gas cylinder under or near this appliance;

Never fill the cylinder beyond 80 percent full;

Do not clean the heater with cleaners that are combustible or corrosive.

Place the dust cap on the cylinder valve outlet whenever the cylinder is not in use. Only install the type of dust cap on the cylinder valve that is provided with the cylinder valve. Other types of caps or plugs may result in leakage of propane.

Certain materials or items, when stored under the heater, will be subjected to radiant heat and could be seriously damaged.

Inspect the visible portion of the hose before each use of the appliance and inspect the entire hose assembly at lease annually.

The cylinder used must include a collar to protect the cylinder valve.

## WARNINGS AND CAUTIONS

**NOTE: PLEASE READ THE FOLLOWING SAFETY RULES:**

Perform a leak test with a soapy solution:

1. To check gas connections.
2. After connecting a new cylinder.
3. Upon re-assembly after disassembly.

This heater is designed to operate with a standard 20 Ib propane cylinder with Approved Cylinder Connection.

## PREPARATION

Before beginning assembly of product, make sure all parts are present. If any part is missing or damaged, do not attempt to assemble the product. Contact customer service for replacement parts.

**TOOLS NEEDED: (NOT INCLUDED)**

Adjustable opening wrench
Philips screwdriver
Estimated time for assembly: 30 minutes.

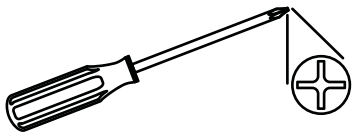

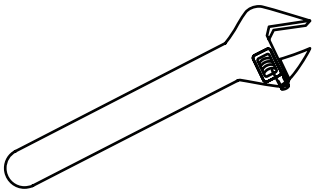

# PARTS LIST / EXPLODED VIEW

❶ 1 Reflector

❷ 1 Burner Assembly

❸ 1 Upper Pole

❹ 1 Lower Pole

❺ 1 Desk surface

❻ 1 Pole supporting board

❼ 1 Cylinder Chain

❽ 3 M6 Nuts

❾ 6 6mm Washers

❿ 3 M6x70 Double Pointed Bolts

⓫ 5 4mm Washers

⓬ 5 M4x 12 Bolts

⓭ 6 M5x12 Bolts

⓮ 6 5mm Washers

⓯ 6 M5x12 Bolts

⓰ 4 M6x14 Bolts

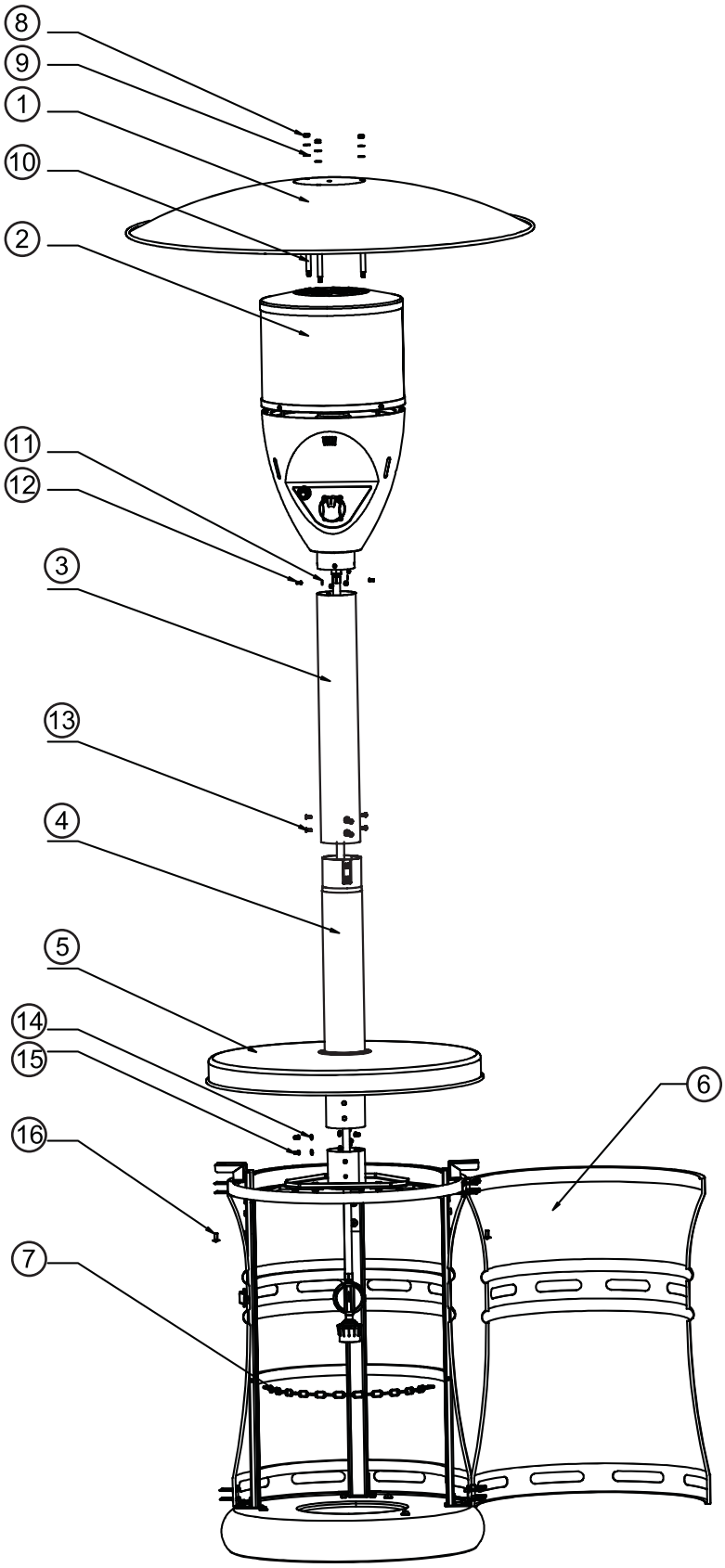

**WARNING:**
Read ALL assembly instructions thoroughly and carefully to insure proper, safe assembly .

**Step 1**

Insert lower pole (4) into the pole supporting board (6) , fix it with 6 pcs 5mm washers (14) and 6 pcs M5x12 bolts (15) .

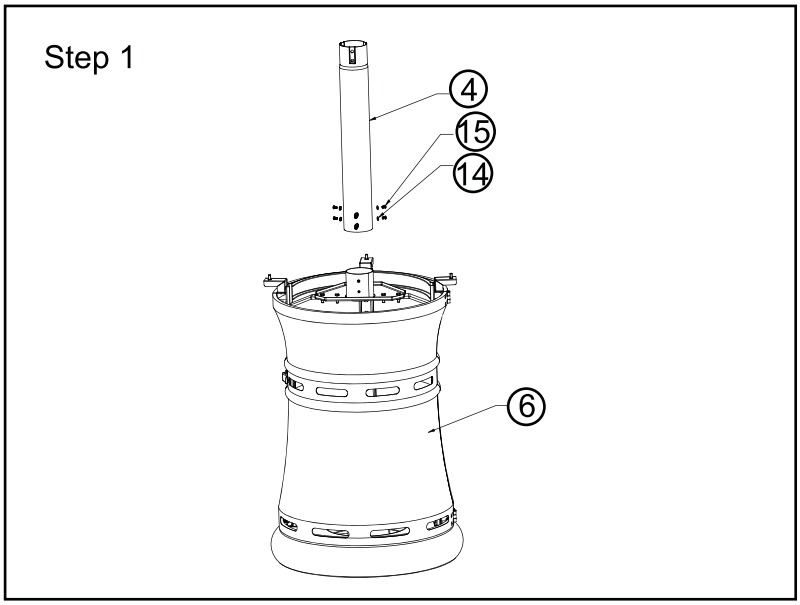


**Hardware Used**

| | | |
|---|---|---|
| 15 M5 X 12 bolt | | X 6 |
| 14 5mm washer | | X 6 |

**Step 2**

Put the desk surface (5) in the lower pole (4) , fix it with 4 pcs M6×14 bolts (16).

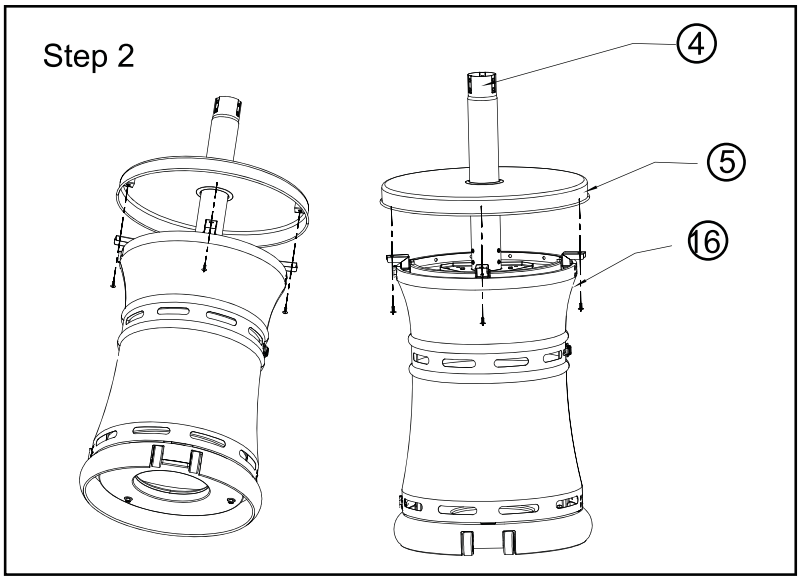


**Hardware Used**

| | | |
|---|---|---|
| 16 M6 X 14 bolt | | X 4 |

**Step 3**

Connect the upper pole (3) on the lower pole (4), fix it with 6pcs M5x12 bolts (13) .

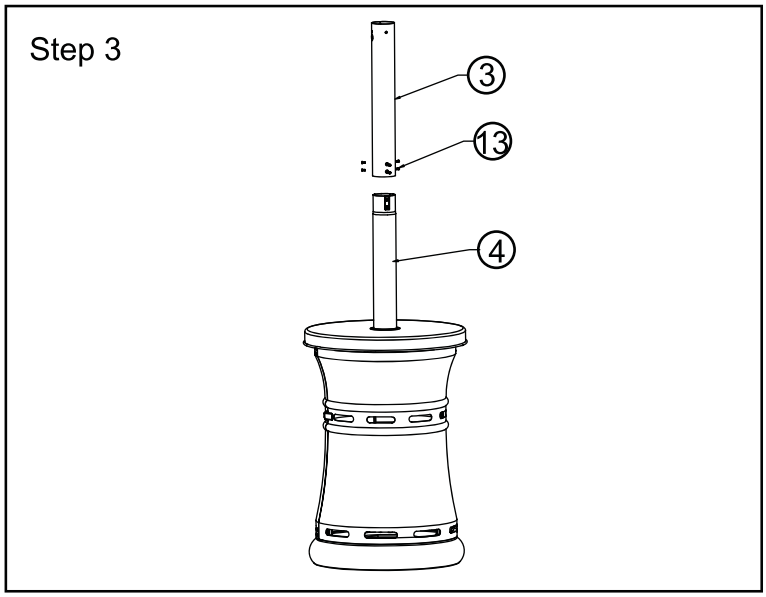


**Hardware Used**

| | | | |
|---|---|---|---|
| 13 M5X12 Bolt | | | X 6 |

**Step 4**

Insert the burner assembly (2) in the upper pole (3), fix it with 5pcs 4mm washers (11) and 5pcs M4×12 bolts (12).

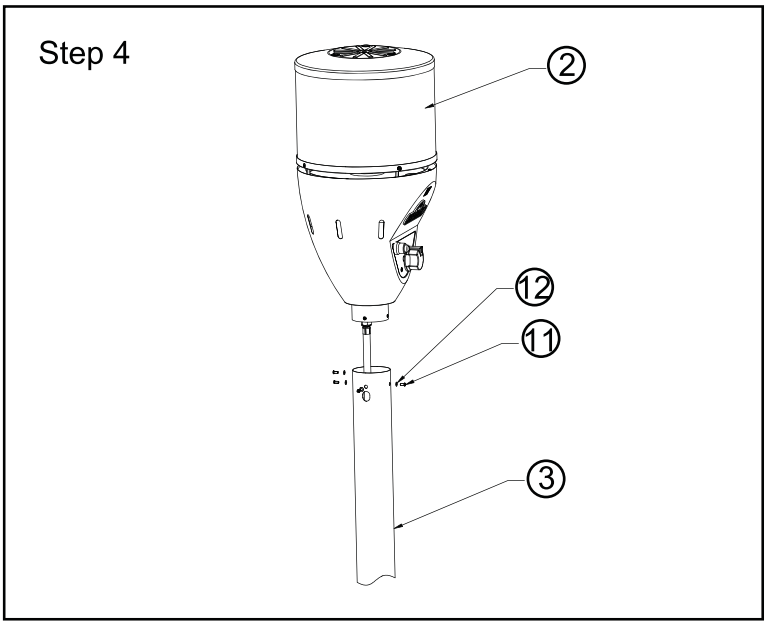


**Hardware Used**

| | | | |
|---|---|---|---|
| 12 M4 X 12 bolts | | | X 5 |
| 11 4mm washer | | | X 5 |

**Step 5**

Install reflector assembly (1) , fix it with 3pcs M6×70 double pointed bolts (10)、6pcs 6mm washers (9) and 3 pcs M6 nuts (8) .

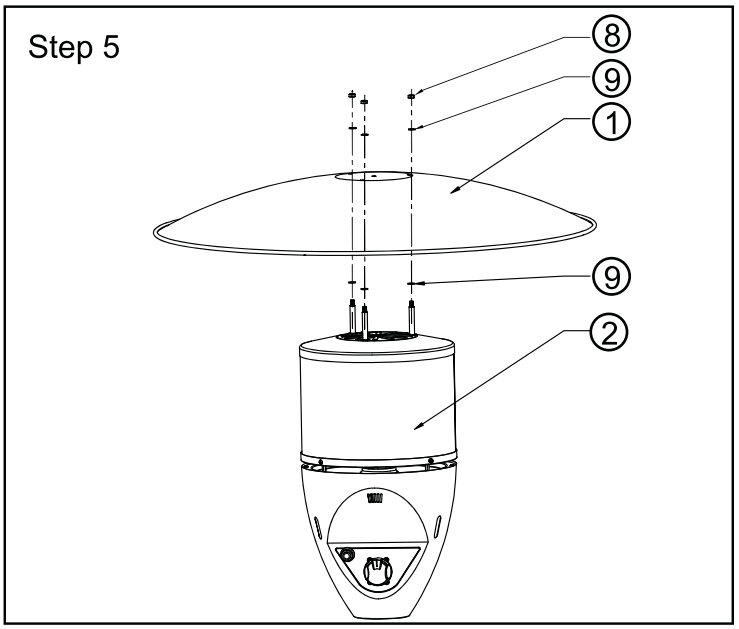


**Hardware Used**

| | | | |
|---|---|---|---|
| ⑧ | M6 Nut | | x 3 |
| ⑨ | 6mm Washer | | x 6 |
| ⑩ | M6x70 Double Pointed Bolts | | x 3 |

**Step 6**

Open the door ,Put cylinder into the big hole on bottom panel and lock the cylinder chain .

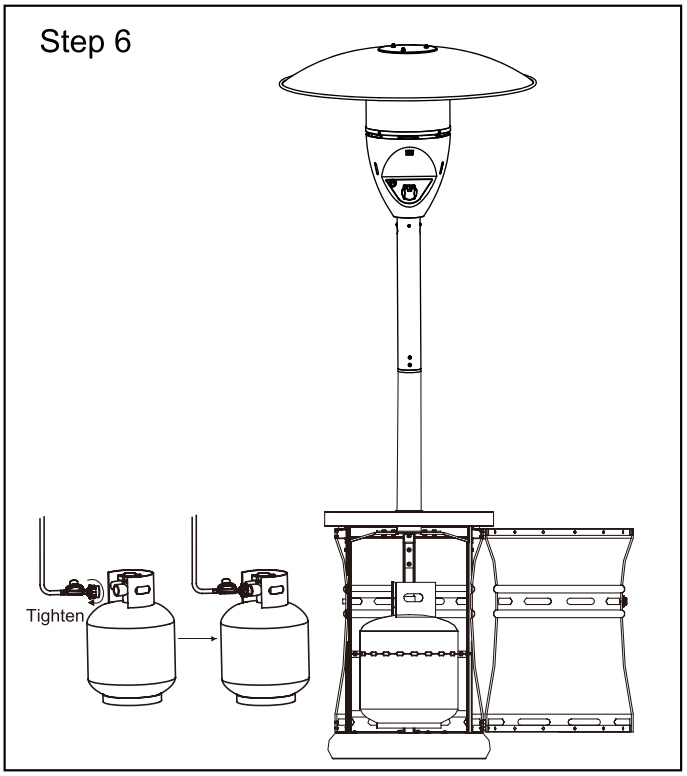

**Check for leaks**
Your patio heater has been checked at all factory connections for leakage. To check the connection at the gas hose/regulator /cylinder.

1) Make leakage solution by mixing 1part liquid dish soap and 3 parts water.

2) Spoon or brush several drops (or use squirt bottle) of the solution onto hose connection, regulator & cylinder connection.

3) Turn on gas cylinder valve. Inspect the connections and look for bubbles.

4) If no bubbles appear, the connection is safe.

5) If bubbles appear,there is a leak. Loosen and re-tighten this connection. If there is still a leak,please call customer service:
**1-866-814-0585**

**Note:**
1) The cylinder supply system must be arranged for vapor withdrawal;

2) The cylinder used must include a collar to protect the cylinder valve.

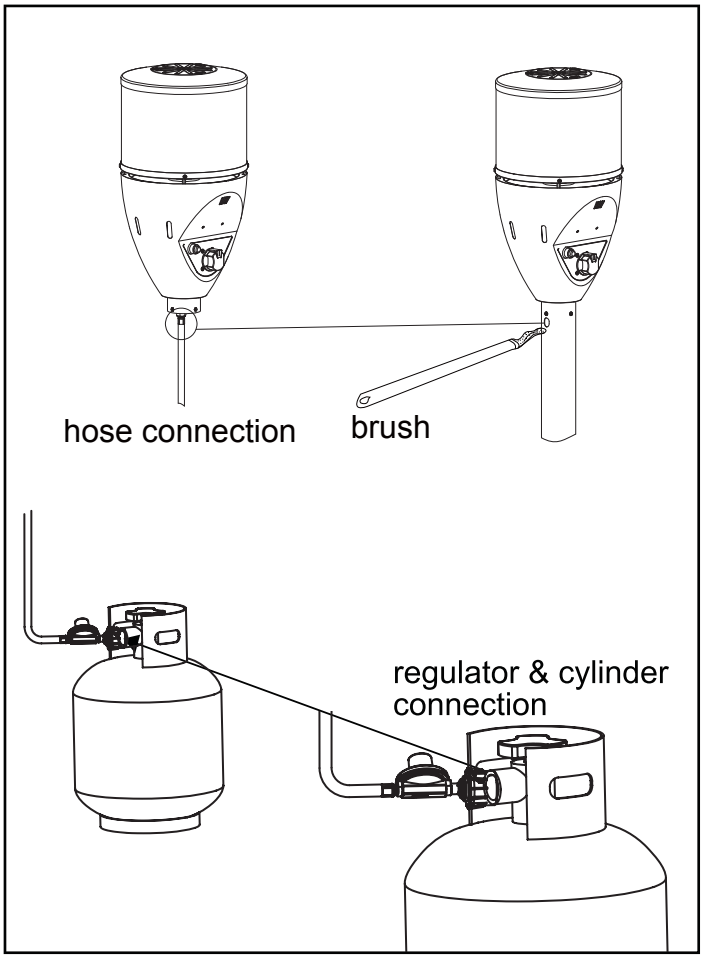

# IGNITER BATTERY INSTALLATION

**Instruction For Installing Battery**

Remove igniter button by turning counter-clockwise.Install “AAA” battery with positive terminal up as indicated in diagram. Replace igniter button.

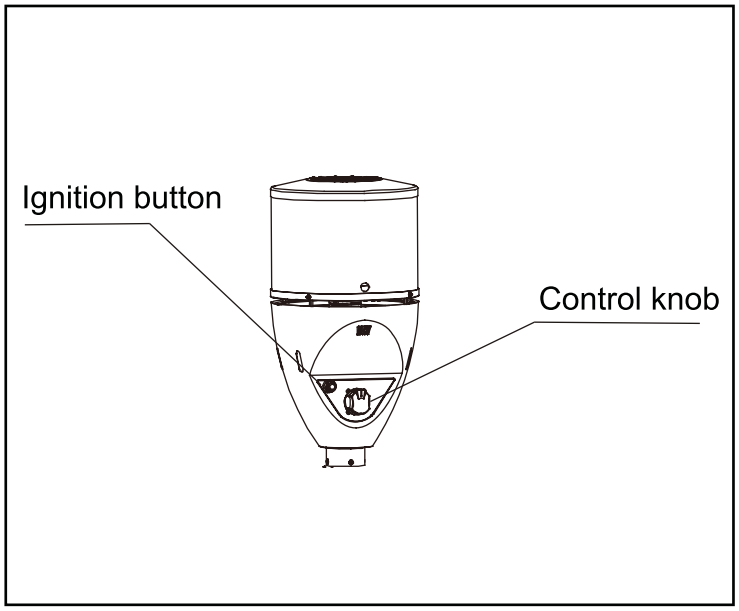


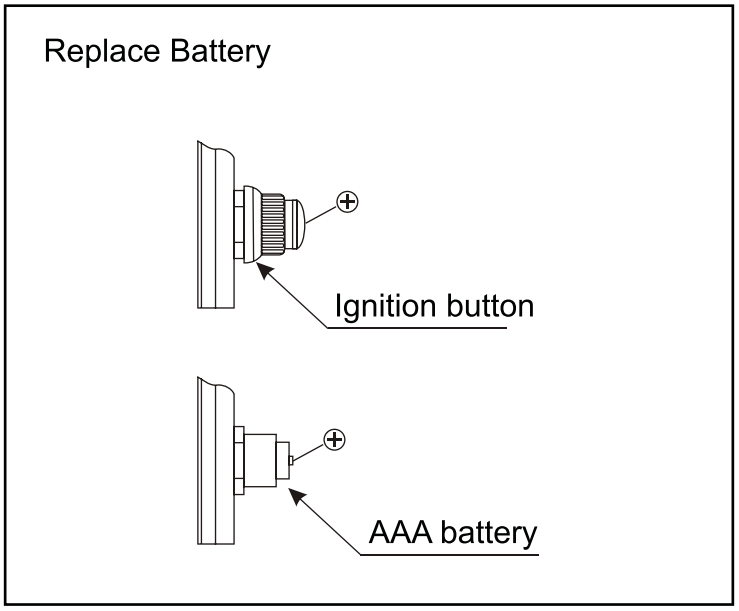

**WARNING: DO NOT ATTEMPT TO OPERATE HEATER UNTIL YOU HAVE READ AND UNDERSTAND ALL PRECAUTIONS . FAILURE TO DO SO CAN RESULT IN SERIOUS PERSONAL INJURY, DEATH, OR PROPERTY DAMAGE.**

**Before turning gas supply ON**

Your heater was designed and approved for OUTDOOR USE ONLY. DO NOT use it inside a building or any other enclosed area.

Make sure surrounding areas are free of combustible materials, gasoline, and other flammable vapors or liquids.

Ensure that there is no obstruction to air ventilation.

Be sure all gas connections are tight and there are no leaks.

Be sure the access panel is clear of debris.

Be sure any component removed during assembly or servicing is replaced and fastened prior to starting.

**Before Lighting**

Heater should be thoroughly inspected before each use, and by a qualified service person at least annually.

If relighting a hot heater, always wait at least 5 minutes.

This heater is tested for quality assurance. Ignition attempts should succeed 8 out of 10 attempts.

**Lighting instructions**

1) Push and turn the control knob to “OFF” position.

2）Turn LP cylinder gas valve to fully open position.

**WARNING**

FOR YOUR SAFETY:
If at any time you are unable to light burner and smell gas, wait 5 minutes to allow gas to dissipate before attempting to light heater. If after 1 minute, you are unable to light burner, wait 5 minutes and allow flammable vapors to dissipate before attempting to light heater.

**WARNING**

FOR YOUR SAFETY:
DO NOT touch or move heater for at least 45 minutes after use.

Allow emitter and dome to cool before touching.

**WARNING**

Lighting operations should comply with Lighting Instruction section. Improper lighting operations will cause serious injury and explosion.

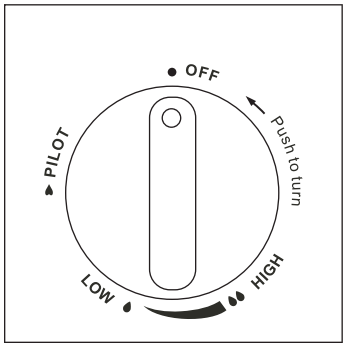

3) Push and turn the control knob counter-clockwise to the "PILOT" position. Depress the control knob. Push and hold the igniter button until the pilot lights.

4) Once the pilot is lit, release the igniter button and continue to depress the control knob for 30 seconds.

5) After depressing the control knob for 30 seconds, release the control knob and turn it counter-clockwise to the “LOW” or “HIGH” position.

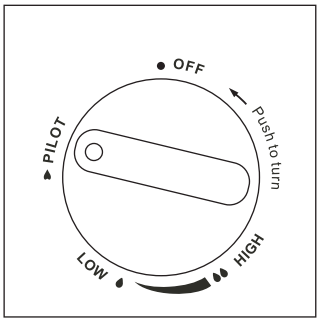


**Note:** If the pilot light will not ignite, turn the control knob to the off position, and fully close the propane tank valve. Wait 5 minutes and then repeat steps 2-4.
Alternately, the pilot can be lit using a wand lighter. Push and turn the control knob to the pilot position. Depress the control knob. Insert the lit lighter through the ignition hole on the emitter screen. Once the pilot lights, remove the lighter and continue to depress the control knob for 30 seconds.
Whenever the unit is disconnected from the gas supply, the supply lines fill with air. Expect a delay in lighting the pilot, if the unit is lit for the first time after reconnecting.

**Flame Characteristic**

The flame pattern at the emitter screen should be visually checked whenever heater is operated. Normally the burner flame is blue, but little yellow flame is acceptable.

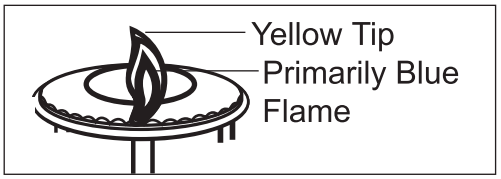


If the flames extend beyond the surface of the emitter grid, or the flame is lifting off the burner or flashing back, or there is black carbon deposits accumulating on the emitter grid or reflector, the heater should be turned off immediately. The heater should not be operated again until the unit is serviced and or repaired.

# OPERATION

CAUTION : AVOID INHALING FUMES EMITTED FROM THE HEATER'S FIRST USE. SMOKE AND ODOR FROM THE BURNING OF OILS USED IN MANUFACTURING WILL APPEAR. BOTH SMOKE AND ODOR WILL DISSIPATE AFTER APPROXIMATELY 30 MINUTES. THE HEATER SHOULD NOT PRODUCE THICK BLACK SMOKE.

**NOTE:**
The burner may be noisy when initially turned on. To eliminate excessive noise from the burner, turn the Control Knob to the "LOW" position. Then, turn the knob to the level of heater desired.

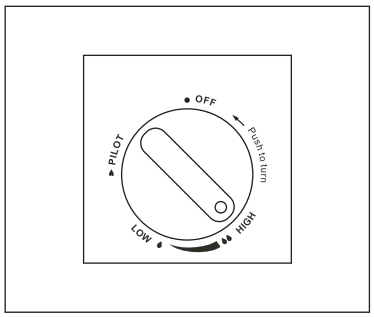


**When heater is ON:**
Emitter screen will become bright red due to intense heat. The color is more visible at night. Burner will display tongues of blue flame. These flames should not be yellow or produce thick black smoke, indicating an obstruction of airflow through the burners.

**Operation pressure checked:**
If the flame is very small, this is because the supply pressure is not enough. Please refill gas cylinder.

**Re-light:**
1) Turn the control knob to "OFF" position.
2) Wait five (5) minutes before attempting to relight pilot.
3) Repeat steps beginning with step 2 of the lighting instruction above.

**Shut down instructions:**
1) Push in and turn control knob clockwise to "OFF" position.
2) Turn LP cylinder gas valve clockwise to "OFF" position when heater is not in use.

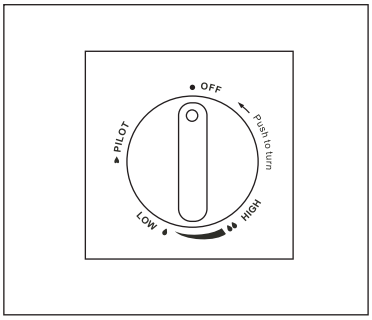


**Note:** After use, some discoloration of the emitter screen is normal.

**The Event of Gas Leakage:**
1) Turn the control knob to "OFF" position.
2) Turn LP cylinder valve to “OFF” position.
3) Wait 5 minutes to allow gas to dissipate.
4) If odor continues, immediately call gas supplier.

**WARNING :** Heater will be hot after use.
Handle with extreme care.

# LOCATING HEADER FOR USE

**CAUTION: WHEN CERTAIN MATERIALS OR ITEMS ARE LEFT, ABOVE, BESIDE OR UNDER THIS HEATER WHILE IN USE, THEY WILL BE SUBJECT TO RADIANT HEAT AND COULD BE SERIOUSLY DAMAGED.**

This heater is primarily used for the heating of outdoor patios, decks, spas, pools and open working areas.

Always make sure that adequate fresh air ventilation is provided. Follow the spacing tolerances shown in Figure 1 at all times.

This heater must be placed on level, firm ground.

Never operate in an explosive atmosphere. Keep away from areas where gasoline or other flammable liquids or vapors are stored or used.

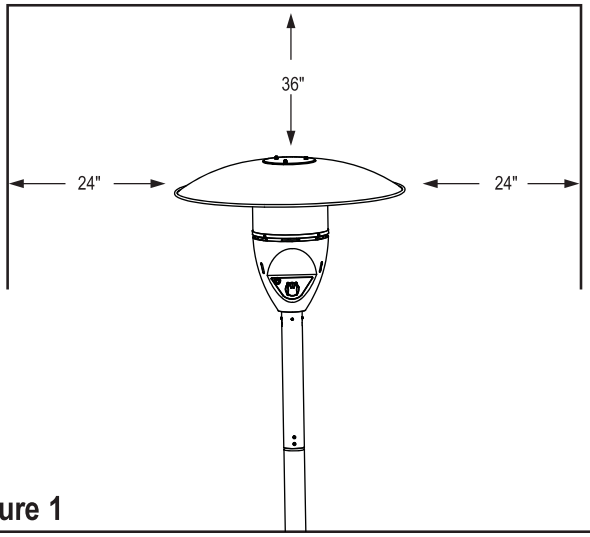


**Figure 1**

**CLEANING AND MAINTENANCE :**

To enjoy years of outstanding performance from your heater make sure you perform the following maintenance activities on a regular basis:

- Keep exterior surfaces clean.
- Use warm soapy water for cleaning. Never use flammable of corrosive cleaning agents.
- While washing your unit, be sure to keep the area around the burner and pilot assembly dry at all times. If the gas control is exposed to water in any way, do NOT try to use it. It must be replaced.
- Keep the appliance area free and clean from combustible materials, gasoline and other flammable vapors and liquids; not obstructing the flow of combustion and ventilation air; keeping the ventilation opening(s) of the cylinder enclosure free and clear from debris.
- Visually check burner flames.
- Screw down the screws on pole, take out the burner head assembly.
- Check if there are cracks or worn sections on hose. If yes, please call our customer service to replace hose.
- **At least once a year, the unit should be inspected** for the presence of spiders, spider webs or other insects.
- Air flow must be unobstructed. Keep controls, burner, and circulating air passageways clean. Signs of possible blockage include:
  - Gas odor with extreme yellow tipping of flame.
  - Heater does NOT reach the desired temperature.
  - Heater glow is excessively uneven.
  - Heater makes popping noises.

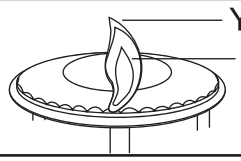


WARNING:
FOR YOUR SAFETY ;
DO NOT touch or move heater for at least 45 minutes after use. Allow all burner elements to cool before touching.

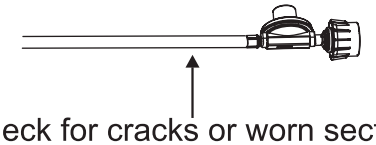


**NOTE:**
In a salt-air environment (such as near an ocean). corrosion occurs more quickly than normal. Frequently check for corroded areas and repair them promptly.

**NOTE:**
Wait until heater is cool before covering.

- Spiders and insects can nest in the burner or orifices. This dangerous condition can damage heater and render it unsafe for use. Clean burner holes by using a heavy-duty pipe cleaner. Compressed air may help clear away smaller particles.

- Carbon deposits may create a fire hazard. Clean dome and engine with warm soapy water if any carbon deposits develop.

**STORAGE:**

**Between uses:**

- Turn the control knob to "OFF" position.

- Turn LP cylinder to "OFF" position.

- Store heater upright in an area sheltered from direct contact with inclement weather (such as rain, sleet, hail, snow, dust and debris).

- If desired, cover heater to protect exterior surfaces and to help prevent build up in air passages.

**During periods of extended inactivity or when transporting;**

- Turn the control knob to "OFF" position.

- Disconnect the regulator from the LP Cylinder by turning counter-clockwise and move to a secure, well-ventilated location outdoors. DO NOT store in a location that will exceed 125 degrees F.

- Store heater upright in an area sheltered from direct contact with inclement weather (such as rain, sleet, hail, snow, dust and debris).

- If desired, cover heater to protect exterior surfaces and to help prevent build up in air passages.

**NOTE:**
Wait until heater is cool before covering.

| PROBLEM | PROBABLE CAUSE | SOLUTION |
|---|---|---|
| Pilot will not light | Gas valve may be OFF | Turn the gas valve ON |
| | Tank fuel empty | Refill LP gas tank |
| | Air in supply system | Purge air from lines |
| | Loose connection | Check all fittings |
| Pilot will not stay on | Debris around pilot | Clean dirty area |
| | Loose connection | Tighten connection |
| | Thermocouple | Contact customer service |
| | Gas leak in line | Check connections |
| | Lack of fuel pressure | Fuel tank is near empty |
| Burner will not light | Pressure is low | Fuel tank is near empty |
| | Control valve not ON | Turn valve to ON |
| | Thermocouple broken | Contact customer service |
| | Pilot light assembly bent or not in correct location | Contact customer service |

## ONE YEAR LIMITED WARRANTY

Outdoor Order™ LLC warrants to the original retail purchaser of this heater. that if assembled and operated in accordance with the printed instructions accompanying it, the mechanical operation of the heater for a period of one year.

Outdoor Order™ LLC warrants that powder coat finishes will be free from corrosion for a period of two years, and metallic finishes for a period of one year. Small cosmetic blemishes inherent to the casting process and which do not affect the performance of the heater are not covered. Outdoor Order™ LLC warrants the glass tube heating element in our PrismQuad™ and Axis™ for a period of 90 days from the date of purchase.
The warranty does not cover any failures or operating difficulties due to accident, abuse, misuse, alteration, misapplication, neglect, improper installation, improper maintenance or service by you or a third party. Please see our Owner's Manual for care and maintenance instructions.

This warranty does not cover corrosion due to extreme environments. The warranty does cover rusting through of parts necessary for the operation of the heater. Occasional rusting or staining due to environmental conditions or neglect are not covered.

This warranty shall be limited to the repair or replacement of parts only, which prove defective under normal use and service. Before returning any parts, Customer should contact the Outdoor Order™ LLC customer service department using the contact information listed below. If Outdoor Order™ LLC confirms, after examination a defect covered by this limited warranty in any returned part, and if Outdoor Order™ LLC approved the claim, Outdoor Order™ LLC will replace such defective part without charge. If returned products are found ineligible for warranty coverage, the product will be retuned to the sender without repair or replacement, at the sender's expense.

This warranty expires upon transfer of title of any products by the original retail purchaser.

Outdoor Order™ LLC does not authorize any person or company to assume for it any other obligation or liability in connection with the sale, installation, use, removal, return, or replacement of its equipment, and no such representations are binding on Outdoor Order™ LLC.

Outdoor Order™ reserves the right to change this warranty at any time. For our most current warranty, please visit our website at www.outdoororder.com.

**OUTDOOR ORDER LLC.™**
1-888-806-8836
cs@outdoororder.com

# Dear Valued Customer,

*Thank you for your recent purchase from Outdoor Order LLC™. We pride ourselves on providing innovative, reliable and stylish outdoor comfort products. Our mission is simple, "bring order to the outdoors".*

*Our collection meets rigorous manufacturing standards and is backed by a comprehensive warranty. Tough enough for demanding commercial environments and yet accessible to the discriminating consumer, Outdoor Order products stand apart in an industry we are proud to be a part of it.*

*We pride ourselves on our service commitment. No problem is too small and no order too big, that's our mantra. Our customer service department is here to help you with any problem, and our logistics and support team can deliver in a pinch. We never forget that you come first, and always will.*

*Outdoor Order*

**"BRINGING ORDER TO THE OUTDOORS"**


MANUFACTURED BY:

**OUTDOOR ORDER LLC™**

T. 1.888-806-8836

cs@outdooorder.com

P.O.Box 10349 Torrance, CA 90505

OUT
DOOR
ORDER™

*Bringing order to the outdoors*

WWW.OUTDOORORDER.COM

REV 3/18